KI0294

Shopping bag in cotton and woven jute threads

100% jute/ 100% cotton. Shopping bag featuring upper and lower panels crafted from woven jute threads with a knit effect and a central cotton panel for easy decoration access. Object-holder inside pocket with zip fastening.

One Size 750 g/m²

More information

Logistic

1 30

Country of origin

IN - India

Customs code

42029298

Washing instructions

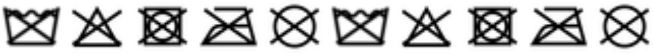

Black

Cumin Yellow / Natural

Minorca Navy / Natural

Natural

KI0294

Shopping bag in cotton and woven jute threads

Dimensions (cm)

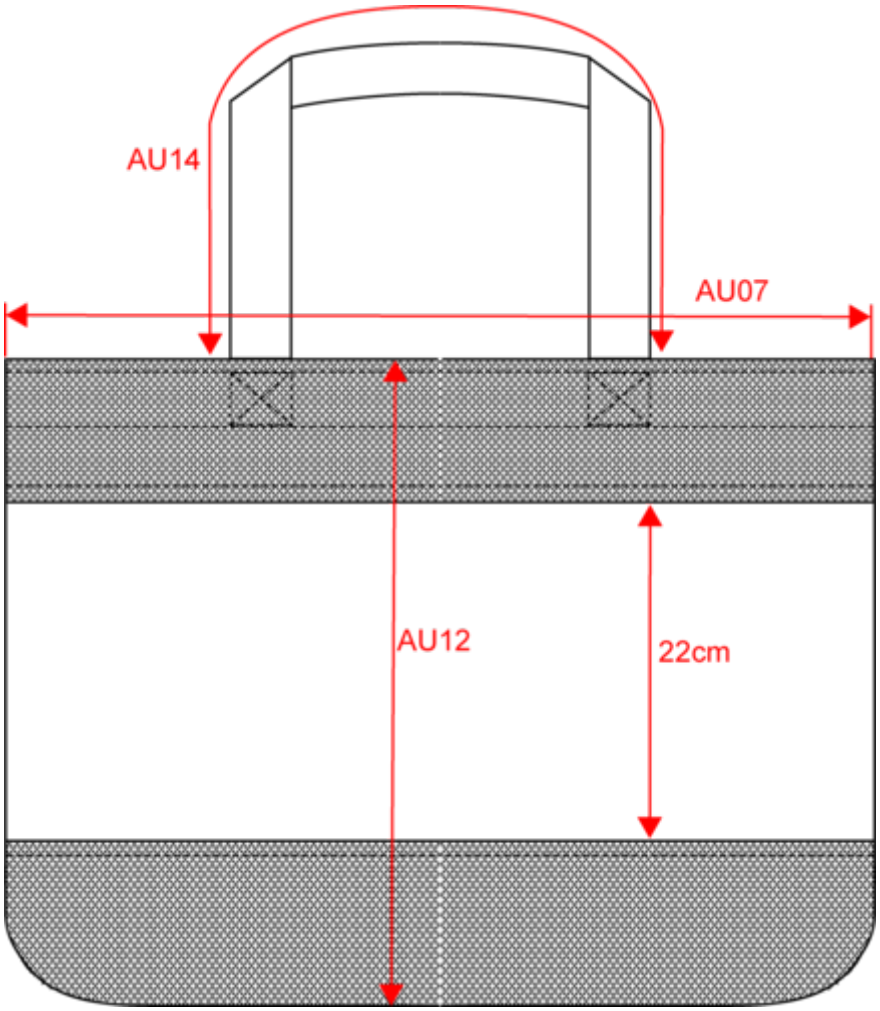

Measurements in cm	One size
AU07 - Total width	45.00
AU12 - Total height	40.00
AU14 - Handle length	62.00

KI0294

Shopping bag in cotton and woven jute threads

Colours information

Black
RVB : 35,35,37
Pantone C : Black
Pantone TCX : 19-4004TCX

Cumin Yellow
RVB : 211,149,66
Pantone C : 7510C / 7504C
Pantone TCX : 16-1054C / 16-1334TCX

Natural
RVB : 229,227,215
Pantone C : 7534C
Pantone TCX : 12-0404TCX

Minorca Navy
RVB :
Pantone C :
Pantone TCX :

Natural
RVB : 229,227,215
Pantone C : 7534C
Pantone TCX : 12-0404TCX

Natural
RVB : 229,227,215
Pantone C : 7534C
Pantone TCX : 12-0404TCX

Logistic 1 30

Sizes	Width (cm)	Height (cm)	Length (cm)	Net weight (kg)	Gross weight (kg)	Pieces/Box	Pieces/Bundle
One Size	47.00	30.00	44.00	11.50000	14.00000	30	1